# Footpath Trading Guidelines



Footpath trading in Bass Coast Shire provides businesses with the opportunity to extend their area available for commercial activities and provides enhanced public outdoor spaces.

Council aims to provide a safe environment, by ensuring streets are safe and have unobstructed passage for pedestrians, in particular those who may be physically or vision impaired. By reducing the amount of goods on footpaths, pedestrian congestion will be minimised, and overall presentation of the area will

be improved. Footpath activity must make a positive contribution to the character and amenity of the area and surrounding residential areas.

## Document Intent and Purpose

The intent of this document is to:

- Specify the Footpath Trading Conditions;
- Describe and differentiate the various zones involved in footpath trading;
- Detail the specific requirements for a permit for A-Frames, Display of Goods and Outdoor Dining; and
- Establish the actions involved in a breach of the conditions.

## Scope

These guidelines apply to businesses located within the Bass Coast Shire that wish to implement (or continue operating) footpath trading on a Council or Department of Transport and Planning (DTP) managed road.

These guidelines do not apply to:

- Street parties / events;
- Trading within foreshore areas or reserves;
- Trading within the road reserve (parklets);
- Road and / or laneway closures.

This document should be read in conjunction with:

- Council's Local Law No 1 – Neighbourhood Amenity 2022; and
- Council's Fees and Charges Register.

For businesses wanting to implement or continue operating a parklet (within road reserve), refer to the Parklet Guidelines for application requirements, process and design guidelines.

Businesses located within the Cowes Streetscape Masterplan area (refer Figure 1) wanting to implement footpath trading (or parklets) are additionally subject to the *Cowes Activity Centre Public Realm Style Guidelines.* The footpath trading guidelines herein this document must be adhered to, to ensure safety and functionality. The streetscape guidelines specify requirements regarding the look and feel, materials and furniture selection, to ensure consistency across the Cowes Activity Centre.




*Figure 1 – Cowes Masterplan site area*

# Footpath Zones

Council manages footpath trading to provide a safe environment, by ensuring pedestrians have unobstructed passage, in particular those who may be physically or vision impaired, and to ensure the visual amenity of the area is not impacted.

To assess applications for the Footpath Trading, the footpath is divided into three zones. Consideration has been given to the requirements of the Disability Discrimination Act 1992 (DDA) and the Pedestrian Council of Australia's recommendations when determining minimum widths of zones.

Refer to Figure 2 for a diagrammatical representation of the footpath zones.

### *Accessway*

The Accessway (or pedestrian zone) is the area of footpath that extends from the building line or shopfront of business premises and is for the exclusive use of pedestrians.

Accessways allow a clear, safe and consistent pathway which meet the needs of a range of users including parents with prams, pet owners and people of all ages and abilities.

This zone is to remain clear of any obstructions at all times and in all weather conditions. No items are permitted to be placed along the building line or shopfront of the business premises for a minimum of 1.8m-2.0m.

No items may extend into this zone at any time including items overhead below a height of 2.2m.

### *Trading Activity Zone*

The Trading Activity Zone is the only area where footpath trading is permissible. This area may be utilised for placing an advertising sign, display of goods for sale or for use as an outdoor dining area.

It is the area left between the Accessway and Kerbside zone and may vary from street to street, town to town depending on the width of the footpath.

Where business premises are adjacent to an intersection, the Trading Activity Zone must not extend past the building line.

### *Kerbside Zone*

The Kerbside Zone is a buffer from the kerb of a minimum of 70cm to ensure access to and from parked vehicles.

Where there is a disabled parking bay or a loading zone the setback from the kerb will be at least 1.5m to ensure access for disabled persons, and for delivery and/or loading of goods.

Exclusion areas: in addition to the above three zones a 50cm exclusion zone applies around items such as litter bins, bike racks, phone boxes, public seating or any other Council owned assets. For outdoor dining permits this exclusion zone is 1.0m.

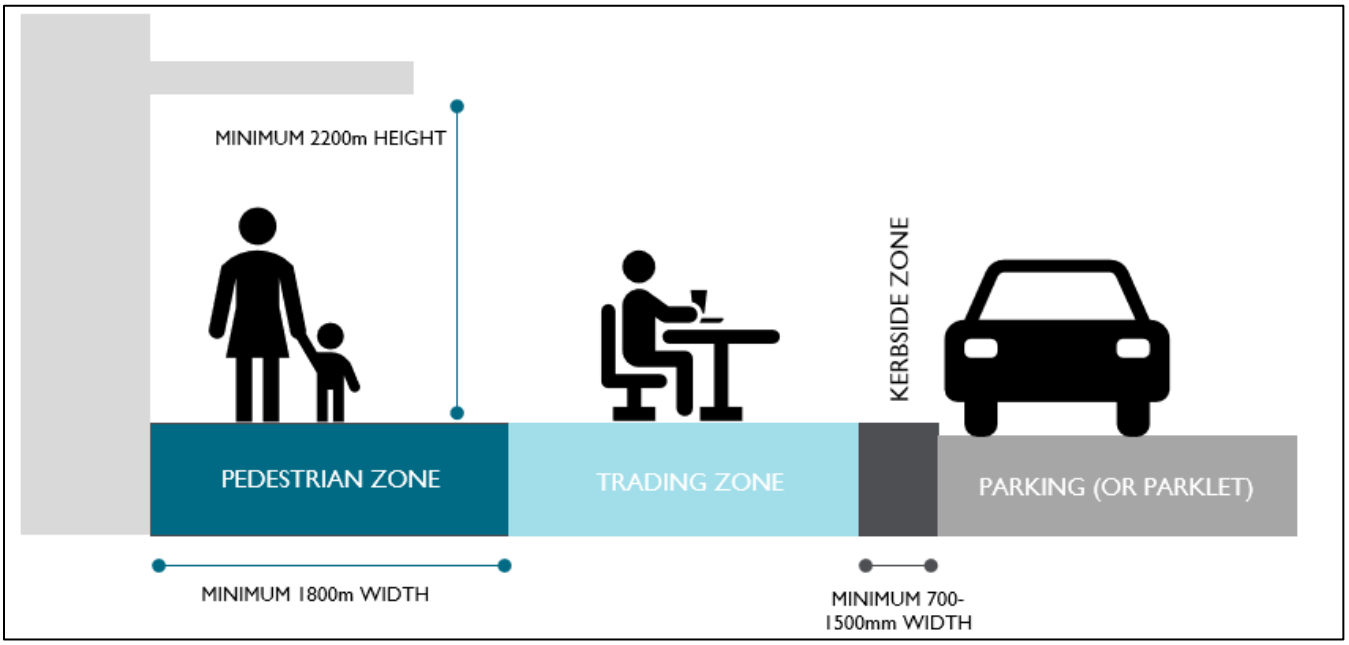


*Figure 2 – Footpath zones*

## Permit Types and Fees

The Footpath Trading program offers annual permits, valid from 1 September to 31 August or any part thereof. At the end of the 12-month period, a renewal invoice will be issued. Permit holders will need to supply proof of Business Association membership if applicable.

The types of permits available include:

- Advertising Sign (A-Frame) Permit;
- Display of Goods for Sale Permit; and
- Outdoor Dining Permit.

Fees payable to Council can be found on Council's Fees and Charges page and include:

- Application Fee – this covers the cost of Council processing the application and (if necessary) inspecting the site. If you apply for a permit and it is not approved, the application fee covers the cost of the application and administration.
- Advertising Sign (A-Frame) Permit Fee - this is a flat rate representing the value of public space that will be utilised.
- Display of Goods for Sale Permit Fee – this represents the value of the public space that will be occupied and is charged per square metre; and
- Outdoor Dining Permit Fee – this represents the value of the public space that will be occupied and is charged per square metre.

All permit fees are non-refundable. Council reserves the right to review fees annually.

## Application Process

In order to implement footpath trading, an application must be lodged with Council. The application fee will need to be paid and the following information provided as part of the application:

- Business details and contact details;
- Description of the type of footpath trading proposed;
- Site plans or photos of the proposed layout of footpath trading;
- Agreement to comply with the permit conditions of these guidelines;
- Certificate of currency for Public Liability Insurance (minimum $10,000,000 cover);
- Proof of business association membership, if applicable;
- Current Liquor Licence (if service of alcohol permit is required);
- Liquor Licence Red Line Plan (if service of alcohol permit is required); and
- Permit Application fee receipt (if applicable).

Council will review the supplied information and decide whether a permit shall be issued considering safety, access and other relevant matters.

Please allow 6 – 8 weeks for a standard application to be processed and approved. More complex applications may take longer. Once the invoice has been paid by the business, a permit will be issued by our Local Laws team.

# A-Frame Permit Conditions

The following conditions apply to the display of advertisement A-Frames which can be located in the Trading Zone.

### *A-Frame Placement Location*

Advertising signs must only be placed within the Trading Activity zone in front of the business premises it advertises. The outside placement of an advertising sign must be in accordance with the approved site plan/photo as submitted with the application form.

Advertising signs must not be placed within 50cm of council infrastructure - ie litter-bins, bike racks, phone boxes, public seating and the building line of adjoining premises. Services such as gas, power, water, fire plugs, fire hydrants and telecommunications must not be covered or obstructed by any footpath trading item at any time.

### *A-Frame Specifications*

Advertising signs must be no larger than 1.2m high and 60 cm wide, with a span of 60 cm unless otherwise approved by an authorised officer. See Figure 3 for a diagrammatic representation of these dimensions.

Advertising signs must be weighted so they do not move however they must not be affixed to any footpath, building, street furniture, pole or other structure, nor may they be tied to trees or other vegetation.

Only one advertising sign is permitted to be displayed per business premise. This must be removed at the conclusion of business each day.

Inflatable signs, portable electric signs, illuminated, revolving, spinning or flashing signs, flags and banners are prohibited from the footpath.

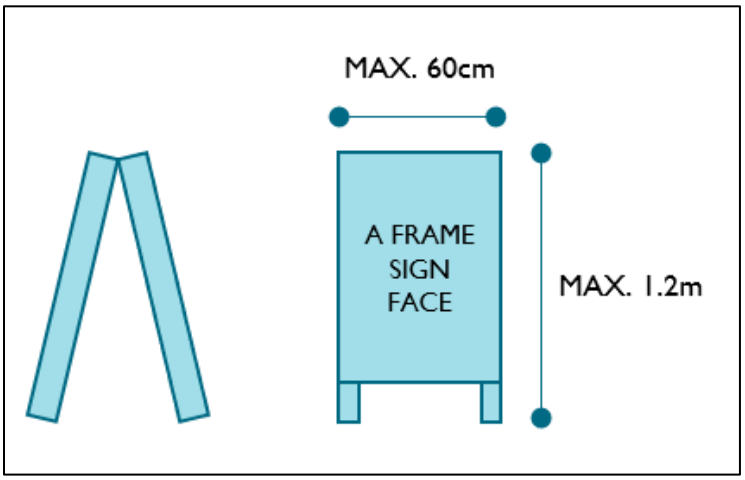

*Figure 3 – A-Frame dimensions*

# Display of Goods Permit Conditions

The following applies to the display of goods within the Trading Zone. This may include display stands or cases, clothing racks and other items.

### *Display of Goods Placement*

The outside placement of goods must be in accordance with the approved site plan as submitted with the application form. Services such as gas, power, water, fire plugs, fire hydrants and telecommunications should not be covered or obstructed by any footpath trading item at any time.

Goods must only be placed on the footpath during normal or authorised trading hours and must only be displayed between 7.00am and 11.00pm on each trading day.

### *Display of Goods Specifications*

Goods must be displayed on stable stands approved by an authorised Council Officer. They must be secured in a manner that ensures adverse weather conditions will not create a risk for pedestrians, property and passing traffic.

Stands and goods must not cause any damage to the footpath. They must not be affixed to any footpath, building, street furniture, pole, tree or other structure.

Stands and displays are prohibited to exceed a height of 1.5m or overhang this zone. Refer to Figure 4 for a depiction of this diagrammatically.

Any awnings to protect goods must be noted on the application site plan and must be securely fixed by an appropriate means to the ground. All retractable awnings must be retracted at close of business.

Buckets, boxes, loose and/or freestanding items are not permissible. Food displays are not permitted on the footpath without prior written consent from Council.

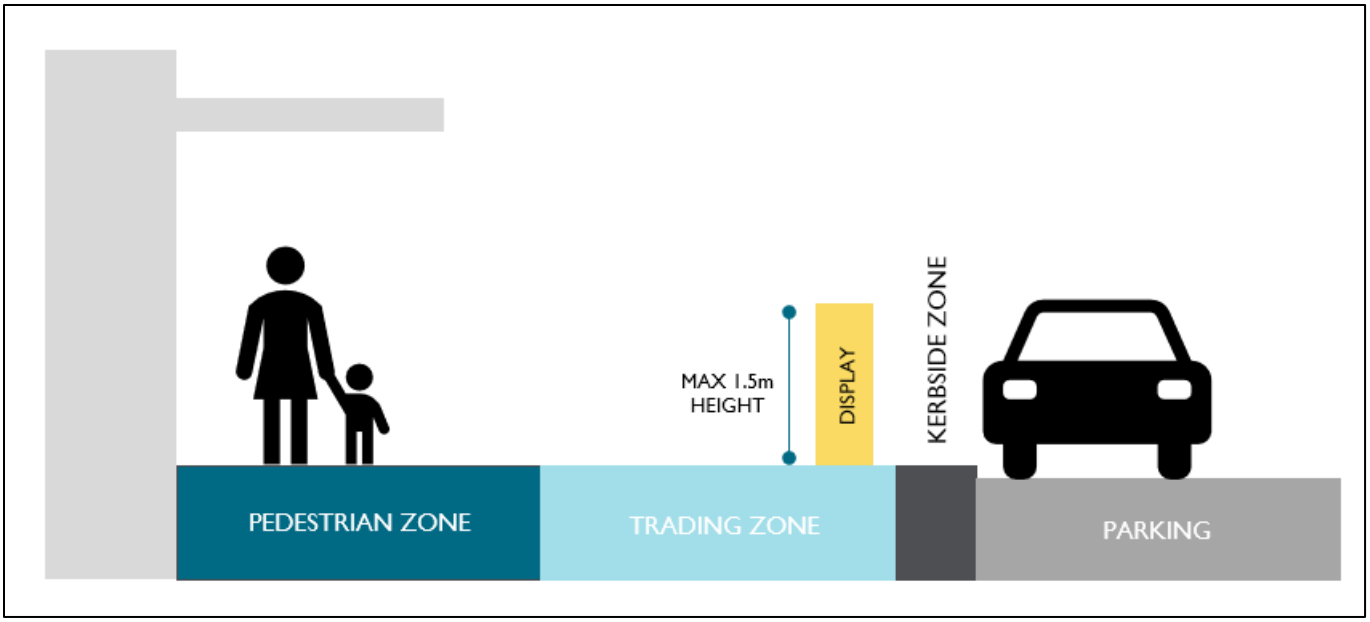


*Figure 4 – Display dimensions*

# Outdoor Dining Permit Conditions

The following applies to the provision of outdoor dining facilities within the Trading Zone. This may include tables and chairs or benches. The provision of outdoor dining facilities within the parking space is subject to the Parklet Guidelines.

Outdoor dining permits will only be issued to premises that are registered with Council's Health Department and meet the requirements under relevant Acts and Codes.

### *Outdoor Dining Facilities Placement*

The outside placement of tables, chairs, screens and any other items must be in accordance with the approved site plan or photo as submitted with the application form. Services such as gas, power, water, fire plugs, fire hydrants and telecommunications must not be covered or obstructed by any footpath trading item at any time.

### *Outdoor Dining Facilities Specifications*

Where a business premise exceeds 12m of frontage then a break of 1.0m will be provided at appropriate point to allow access to the Accessway. Access points must be detailed on the site plan of the application. This requirement is depicted in Figure 5.

The number of tables and chairs permitted within the Trading Activity zone will be dependent upon the size of Trading activity zone determined in the permit. As a guide 2-person tables require a minimum of 2sqm, 3-person tables require 3sqm, and 4-person tables require 4sqm.

Items which are placed on the footpath must be stable enough to withstand wind gusts and of a design approved by Council.

Tables, chairs and screens must not damage the footpath. Permit holders will be responsible for reimbursing Council for any reinstatement works as a result of damage to footpath and/or street fixtures or furniture.

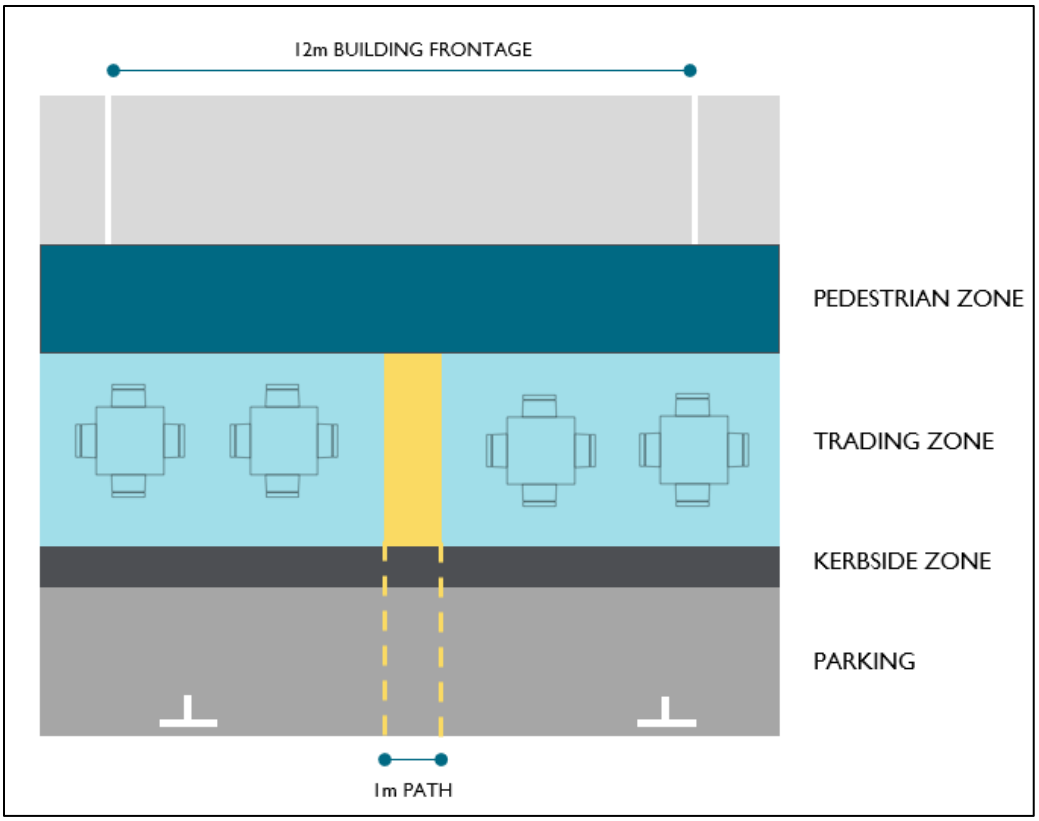


*Figure 5 – Pedestrian access for frontage greater than 12m*

## *Conduct of Patrons & Service Staff*

The Business Owner is responsible for the conduct of patrons in the outdoor dining area and must ensure that they do not move tables and chairs from their position and obstruct the Accessway. The Permit holder must ensure patrons do not allow prams, pets or other personal items to obstruct the Accessway.

Serving staff should facilitate free access by pedestrians and give pedestrians priority right of way.

## *Use & Maintenance of Outdoor Dining Areas*

Permit holders are responsible for maintaining the outdoor dining area. A permit will be revoked or suspended if instances of littering, untidiness, or failure to maintain the Accessway are noted.

No live entertainment or amplification equipment is permitted within the outdoor dining area without the prior written permission of Council.

Business owners are responsible for cigarette butts, ash and other litter generated by their patrons in the Trading Activity zone and must ensure these are cleared away at regular intervals.

Adequate provision of trade waste disposal must be available for disposal of waste – trade waste must not be placed in public street bins. Litter generated by footpath trading must be picked up and deposited within the permit holder's bin. Permit holders and or serving staff found sweeping litter into the gutter will have their permit revoked and will incur littering fines.

### *Heaters, Screens and Umbrellas*

Outdoor heaters must be licensed as part of a permit and are to be covered by the permit holders' public liability insurance. Conditions recommended by the Australian Office of Gas Safety will apply to any approval to place heaters on the footpath. It is the permit holder's responsibility to obtain a copy of these recommendations.

Umbrella awning must have a minimum height of 2.2m at the lowest point to ensure visibility is maintained for vehicles and pedestrians. Umbrellas must not protrude over the kerb, and water from the umbrella must be discharged outside the Accessway. They must not obstruct traffic signals and/or traffic signs.

Umbrellas and screens must be secured in a manner approved by Council and in a way to prevent risk of injury or damage to people and the footpath. Any lock in device must be clearly shown on the permit application.

For safety reasons, screens or screening devices must be placed where there are tables and chairs. Screens must compliment local streetscape.

## Regulatory Control

- Service and consumption of alcohol in Outdoor Dining Area's must be in accordance with the Liquor Control Reform Act 1998.
- A Footpath Trading Permit does not exempt the permit holder from any other Clause within the Bass Coast Shire Council's Local Law, other than the Clause in which is specified on their valid permit.

## Breach of Conditions

Council reserves the right to do any of the following should there be any breach of the above conditions and/or any relevant Local Laws.

- Send the permit holder a Notice to Comply;
- Issue an infringement;
- Request immediate removal of all items on the footpath;
- Impound the items with all associated costs needing to be paid, prior to reclaiming items; and/or
- Revoke the footpath trading permit.